UNIVERSIDAD TECNICA
FEDERICO SANTA MARIA

SERC CHILE
SOLAR ENERGY RESEARCH CENTER

Modelling Monofacial and Bifacial Solar Modules

Christian Rojas, Samir Kouro, Darwin Cardemil
Universidad Tecnica Federico Santa Maria
christian.rojas@usm.cl, samir.kouro@usm.cl

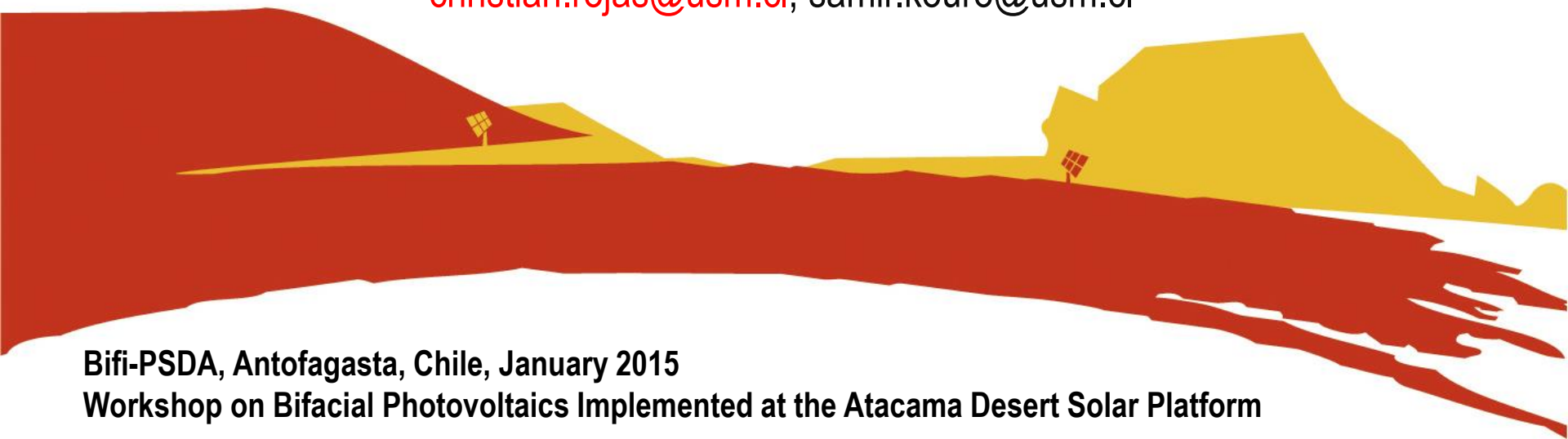

Bifi-PSDA, Antofagasta, Chile, January 2015
Workshop on Bifacial Photovoltaics Implemented at the Atacama Desert Solar Platform

Outline

1. Introduction
2. Analytic Modelling of Photovoltaic Cells
3. Parameter Estimation Methods for Monofacial and Bifacial Solar Cells
4. Preliminary Results
5. Summary

Introduction

→ In order to study electronic power converter for PV systems, modelling of the PV modules that fed the converter are needed

→ PV modules present a non-linear I-V characteristic with several parameters that need to be adjusted from experimental data of practical devices

→ The mathematical model of a PV module may be useful in
- the study of the dynamic analysis of power converters,
- the study of the MPPT tracking (MPPT) algorithms,
- to simulate the PV system using circuit simulators

→ In this work, some estimation methods proposed to monofacial PV modules are extrapolated to bifacial modules by using analytic models

PV systems

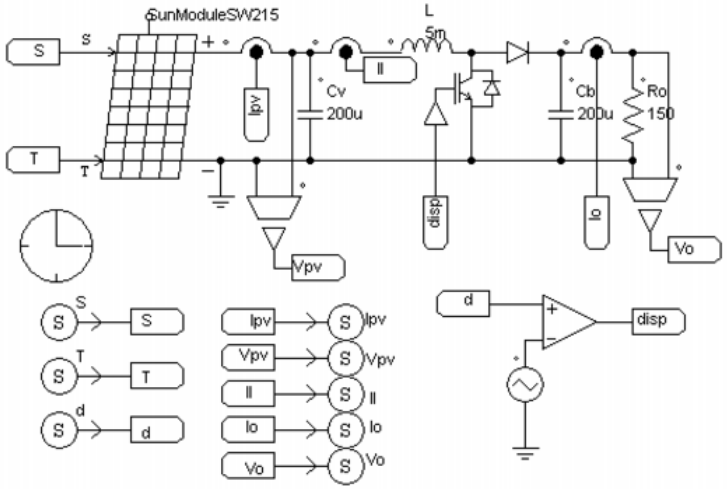

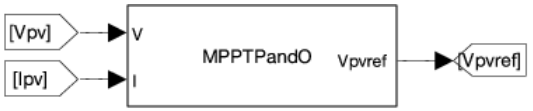

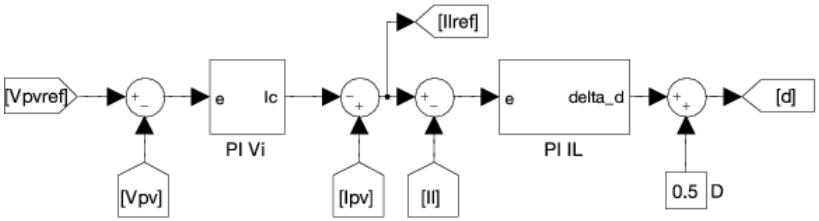

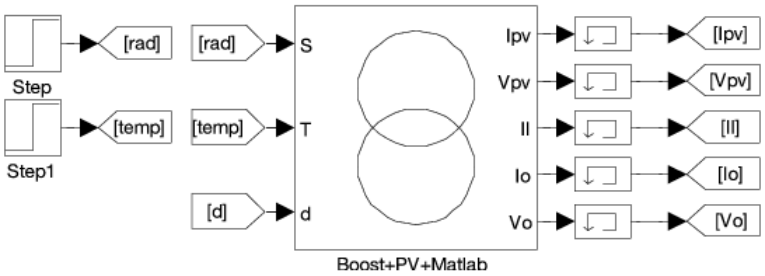

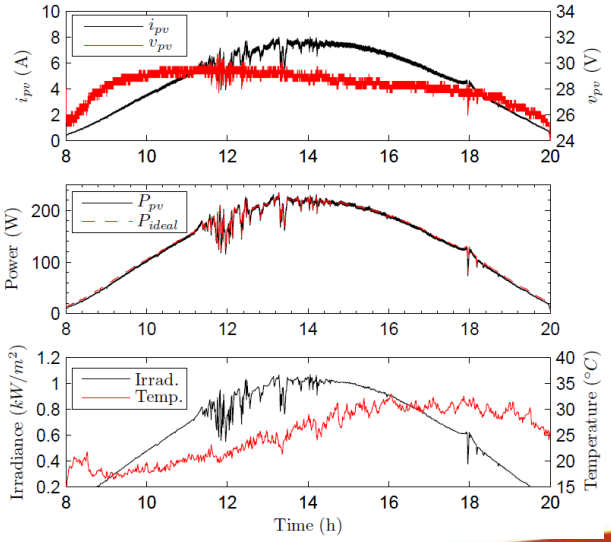

SERC CHILE
SOLAR ENERGY RESEARCH CENTER

PV cells

→ The PV cells can be classified according to its fabrication technology and materials, e.g., monocrystalline, Polycrystalline and Thin-films

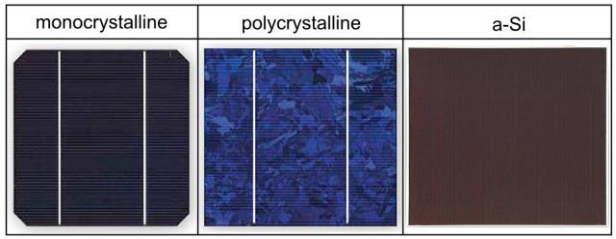

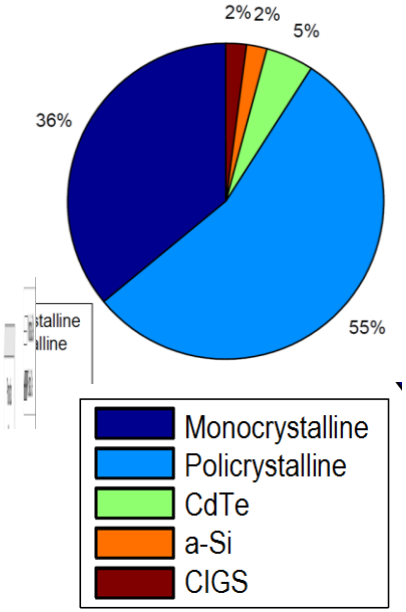

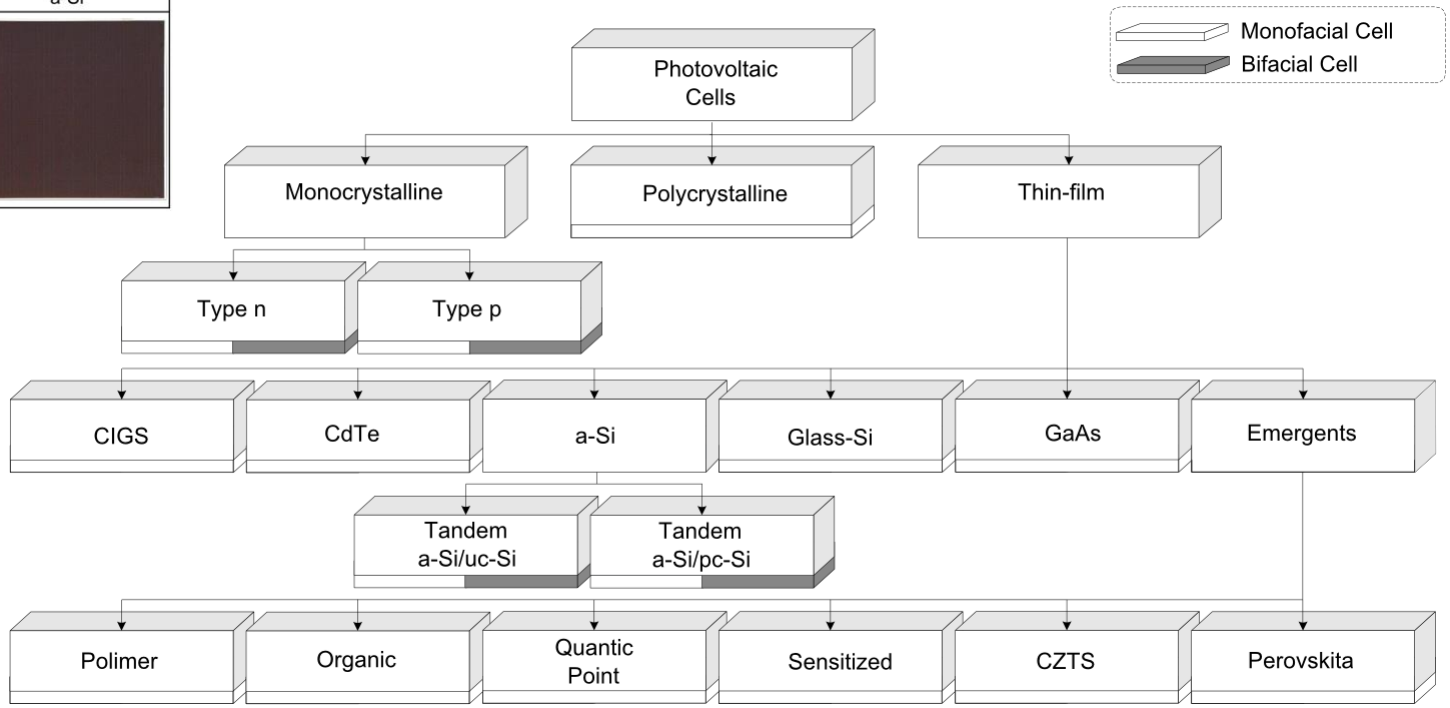

Bifacial solar cells

→ Basic structures of monofacial and bifacial solar cells

→ Monofacial cell structure (monocrystalline)

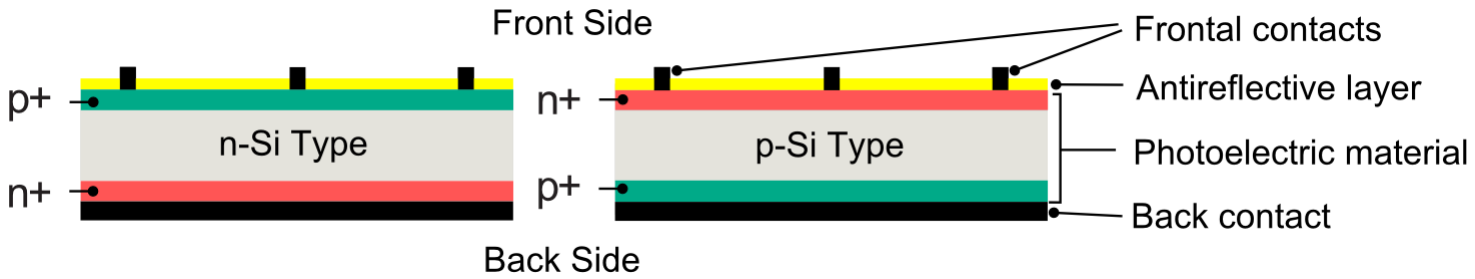

→ Bifacial cell structure (monocrystalline)

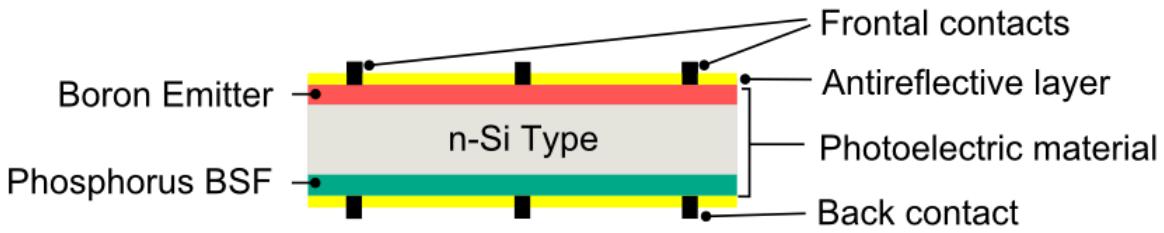

Bifacial solar modules

→ Disposition of bifacial modules

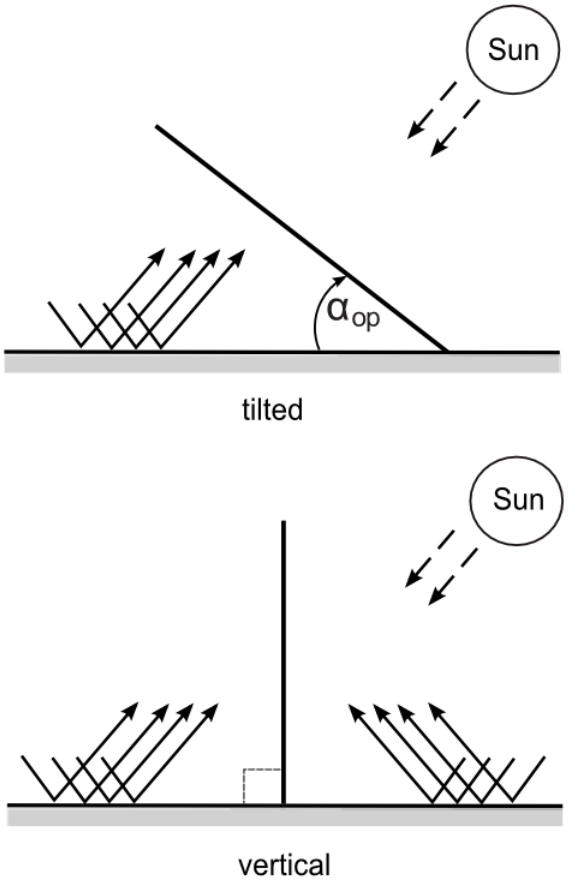

Table 1: Monofacial and Bifacial irradiance behavior

Description	Unit	Value
Latitude - Valparaiso	(°)	33.03333
Local Time Meridian (LTM)	(°)	71.2
Longitude	(°)	71.616669
Azimut module	(°)	0
Optimal angle (α_{opt})	(°)	33.0478
Day number - March 20	-	150
Reflection index	(%)	0.35
Monofacial orientation	-	North
Bifacial orientation	-	East-West

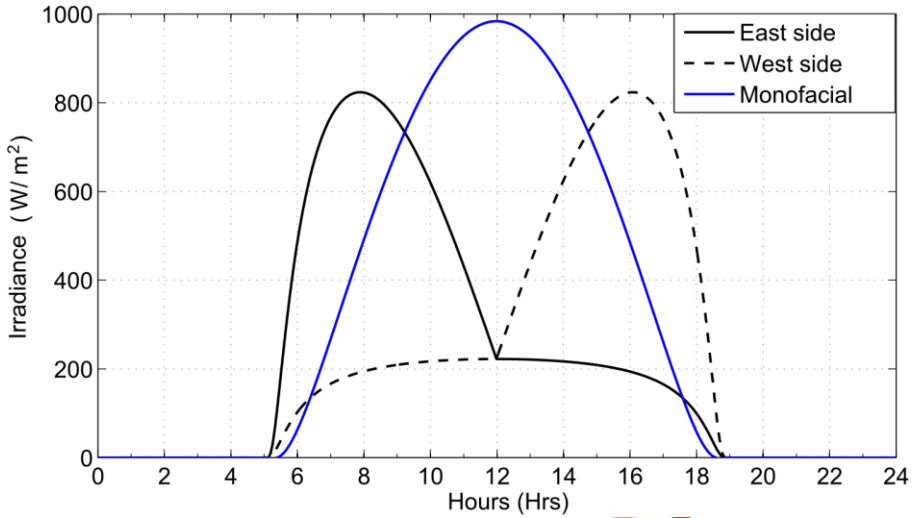

SERC CHILE
SOLAR ENERGY RESEARCH CENTER

Outline

1. Introduction
2. Analytic Modelling of Photovoltaic Cells
3. Parameter Estimation Methods for Monofacial and Bifacial Solar Cells
4. Preliminary Results
5. Summary

Analytic Modelling of Photovoltaic Cells

→ The modelling of PV cells can be classified according to the parameters needed to develop a circuital model to compute the I-V or P-V curves. These are:

- With electrical parameters
- Without electrical parameters

→ The modelling by using electrical parameters can be divided into ideal and real models

→ The ideal model considers a current source and a single diode only

→ The real model considers the type of PV cell and some losses, e.g,:

- contacts voltage drop,
- leakage current,
- recombination losses

Analytic Modelling of Photovoltaic Cells

→ The real model considers a single-diode, two-diodes and thin-film representation

→ The thin-film model is an emergent technology classified in organic and photo-sensitized model

→ Finally, the modelling without electrical parameters considers that the I-V curve can be plotted from the module datasheet only

Analytic Modelling of Photovoltaic Cells

- Classification of models for monofacial cells and modules

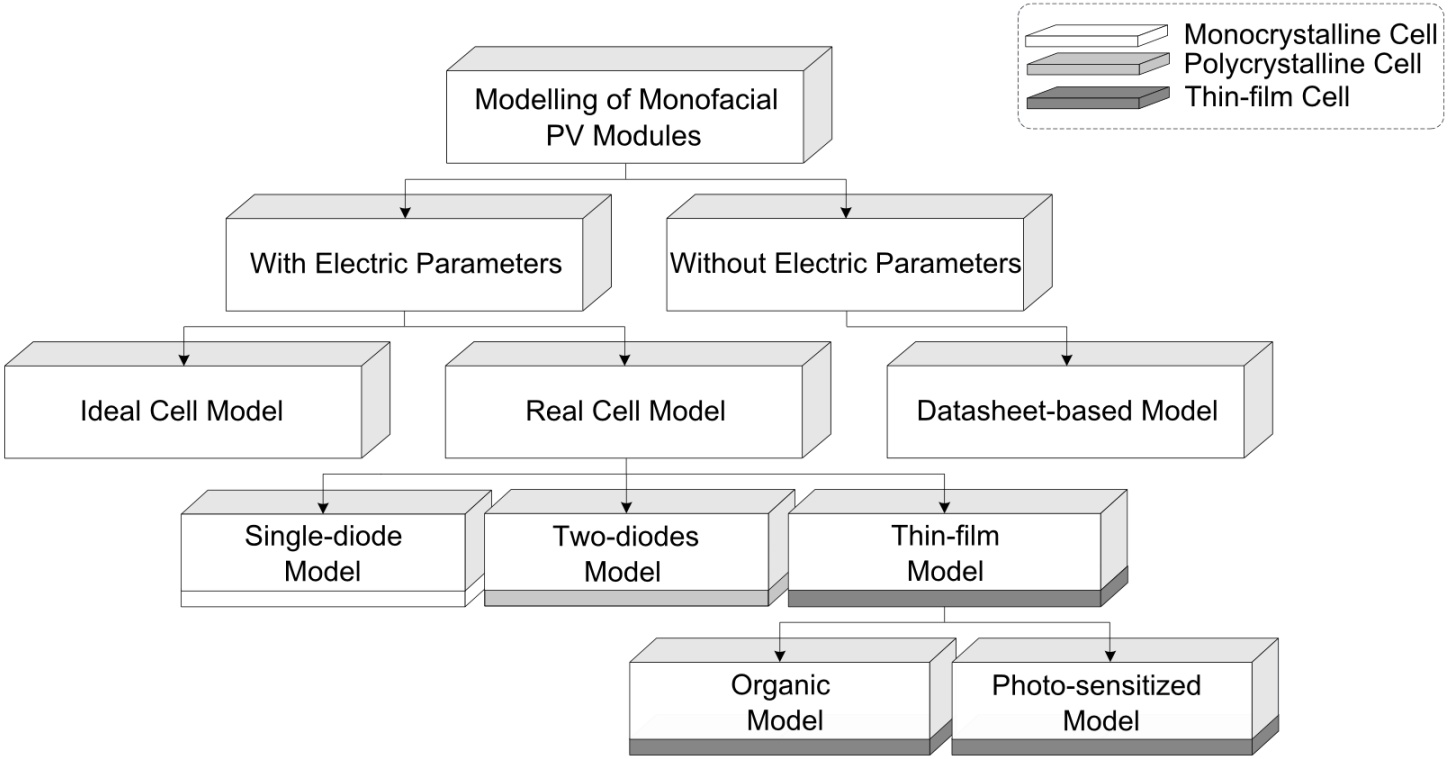

Analytic Modelling of Photovoltaic Cells

- Modelling of monofacial PV cells with electrical parameters

→ From the literature, the behaviour of PV cells or modules under irradiance and temperature conditions is related with physics and electrical phenomena of the semiconductor

- Ideal cell model

→ An ideal PV cell is modelling by a current source, where the delivered current depends on the illumination area and the probability that a photon results in an emitted electron

→ In zero illumination condition, the cell behaves as a diode,

Ideal Cell Model

- Ideal cell model

→ Diode equation $I_d = I_0[\exp(\frac{qV}{kT}) - 1]$ → Ideal PV cell equation $I = I_{ph} - I_d$

→ Equivalent circuit of an ideal PV cell

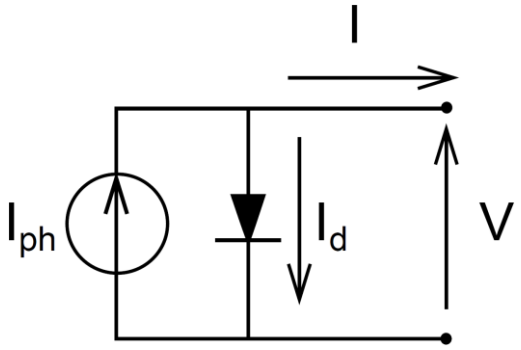

→ Equivalent I-V curve

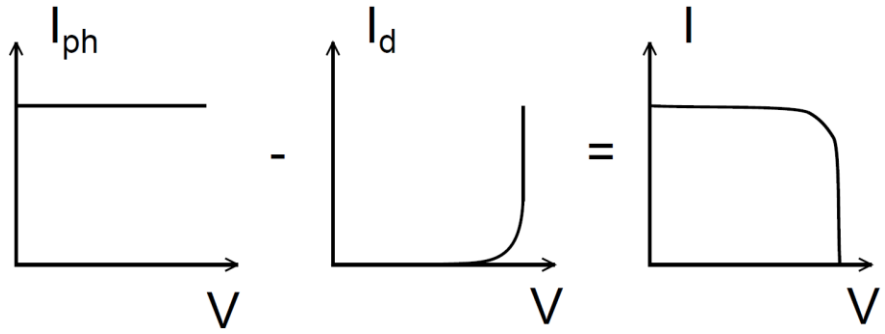

Ideal Cell Model

- Ideal cell model

→ Equivalent characteristic equation of an ideal PV cell

$$I = I_{ph} - I_0[\exp(\frac{qV}{mkT}) - 1]$$

→ where,

- I and V are the delivered current and voltage, respectively
- *q* is electron charge
- *k* is the Boltzmann constant
- *T* is the *p-n* junction temperature
- I_o is the inverse saturation current of the diode
- *m* is the recombination factor, it defines the closeness to an ideal diode, *m* = [1,1.5]
- the term *kT*/*q* = V_t is the thermic voltage

Ideal Cell Model

- Characteristic I-V curve of an PV cell

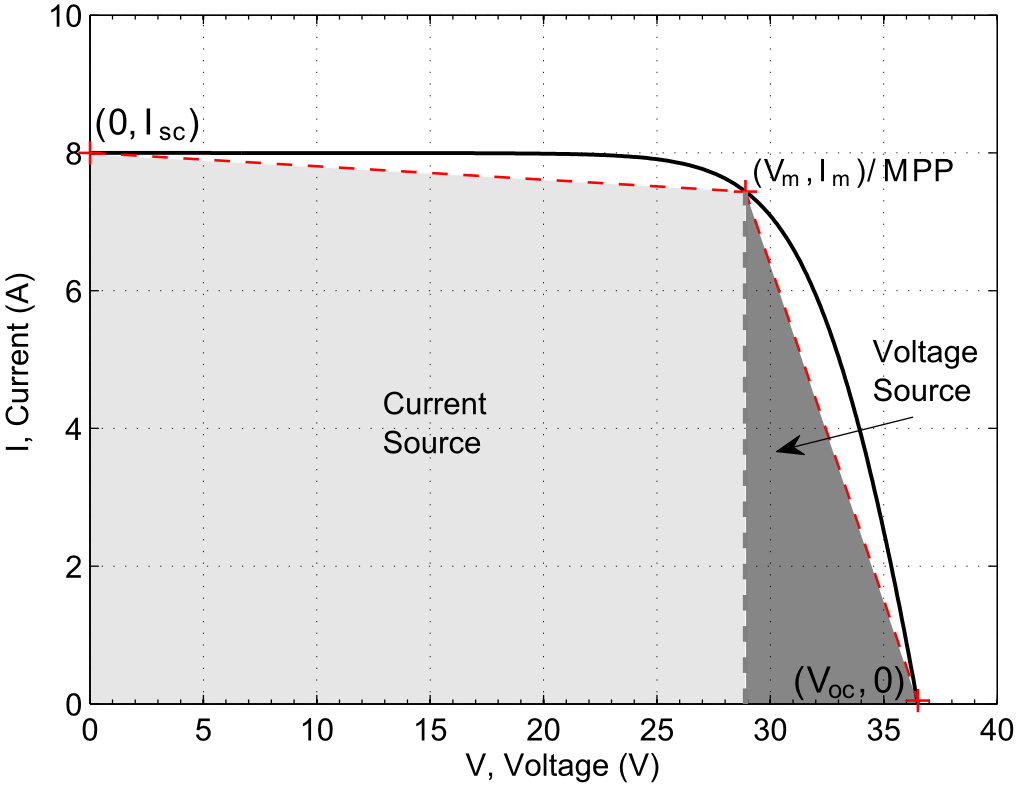

→ where,
- I_{sc} is the short circuit current
- V_{oc} is the open circuit voltage
- V_m and I_m are the voltage and current at maximum power point condition

→ Then a PV cell has a hybrid behaviour between voltage and current source

Analytic Modelling of Photovoltaic Cells

- Real cell model

→ The considered losses for each model are the contacts voltage drop and leakage current represented by R_s and R_p, respectively; i.e., (series and parallel resistances)

→ The series resistance represents the voltage drop across contacts and material layers. R_s depends on the environment conditions and semiconductor materials.

→ Parallel resistance represents the edge leakage current, diffusion paths along dislocations and small metallic short circuits. R_p depends on the fabrication method and semiconductor materials

→ Series resistance strongly affects during voltage source operation, while parallel resistance affects during current source operation

Real Cell Model

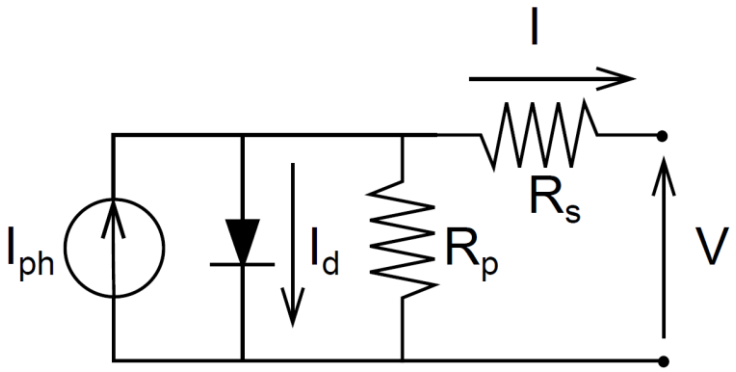

- Single-diode model

→ Equivalent circuit and characteristic equation of a real PV cell using a single-diode model

$$I = I_{ph} - I_0[\exp(\frac{q(V+IR_s)}{mkT}) - 1] - \frac{V+IR_s}{R_p}$$

→ Equivalent characteristic equation considering N_s series and N_p parallel PV cells

$$I = N_p I_{ph} - N_p I_0[\exp(\frac{q(V+IR_s)}{N_s mkT}) - 1] - \frac{V+IR_s}{R_p}$$

Real Cell Model

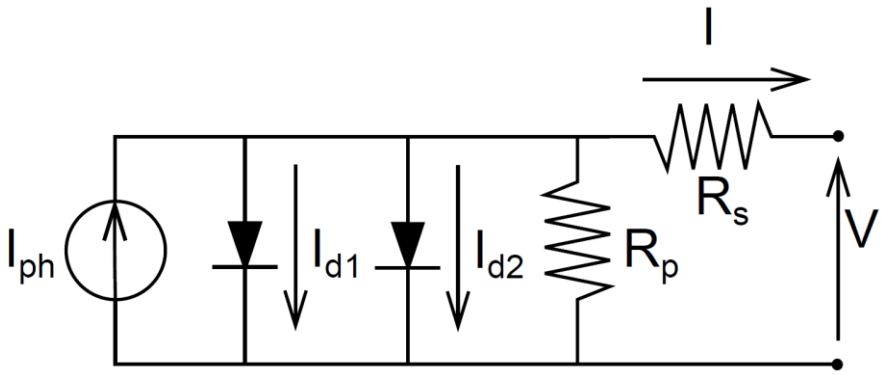

- Two-diodes model

→ Polycrystalline cells requires more accuracy to emulate the I-V curves. An option is to include a variable factor *m* or replace the single-diode representation by to diodes in parallel with different ideal factors m_1 and m_2, respectively

→ The first diode represents the emitter-base diffusion current and the second diode represents the generation and recombination at the space charge region

→ Equivalent circuit and characteristic equation of a real PV cell using a two-diodes

$$I = I_{ph} - I_{01}[\exp(\frac{q(V+IR_s)}{m_1 kT}) - 1] - I_{02}[\exp(\frac{q(V+IR_s)}{m_2 kT}) - 1] - \frac{V+IR_s}{R_p}$$

Real Cell Model

- Thin-film model

→ Thin-film cells are represented by including a recombination leakage current I_{rec}

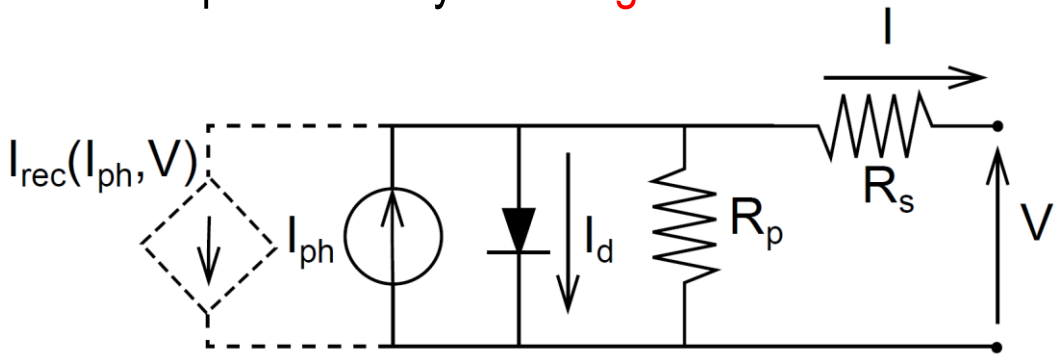

$$I_{rec} = I_{ph}\frac{d_i}{(\mu\tau)_{eff}[V_{bi} - (v - IR_s)]/d_i}$$

$$(\mu\tau)_{eff} = \frac{(\mu^o)_n(\tau^o)_n(\mu^o)_p(\tau^o)_p}{(\mu^o)_n(\tau^o)_n + (\mu^o)_p(\tau^o)_p}$$

→ where, d_i is the ratio of the cell thickness $(\mu^o)_n$ and $(\tau^o)_p$ are band carriers mobility

Thin-film Models

- Organic model

→ Organic cells are a class of low-cost thin-film solar cells. These can be represented by including a recombination diode D_{rec}, free carriers extraction diode D_{ext}, and a dark current diode D_{dark}

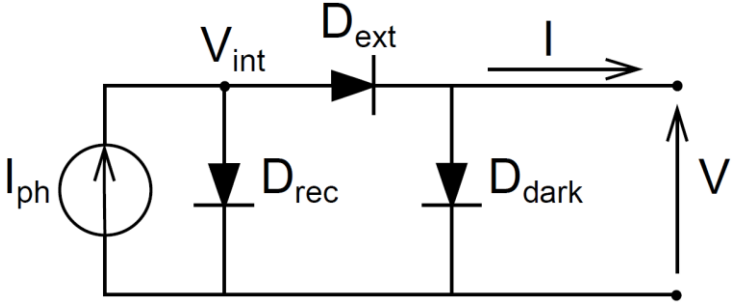

$$I = I_{ph} - I_{rec} - f(V)$$
$$Irec = f_{rec}(V_{int})$$
$$I_{rec} = I_{ph} - f_{rec}V_{int} = f_{rec}(V_int)$$
$$I_{ph} = f_{rec}(V_{int}) + f(V_{oc}, f_{rec}(V_{int})$$
$$f(V_{oc}) = f_{ext}(V_{int} - V_{oc})$$

→ where, $f(V)$ is the I-V curve, f_{rec} and f_{ext} are the curves of D_{rec} and D_{ext}, respectively

Thin-film Models

- Photo-sensitized

→ The dye-sensitized solar cells (DSSC) are a class of thin-film cell with photo-sensitized material.

→ These cells are typically represented by capacitors and non-linear resistances

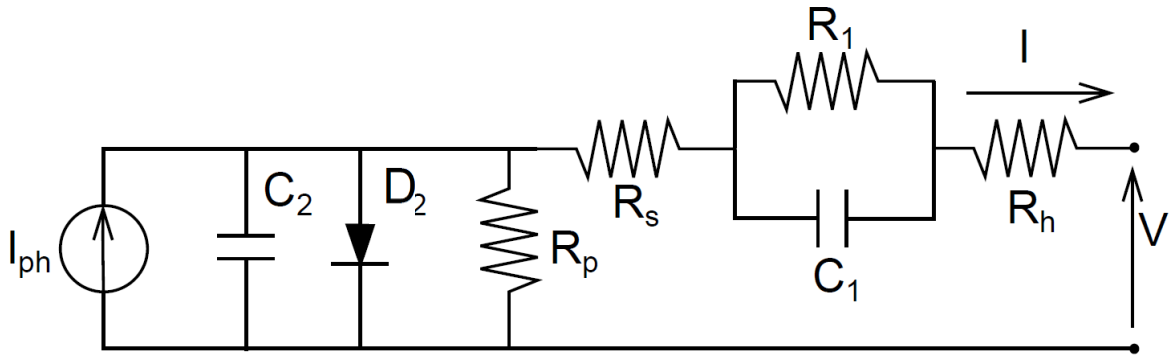

Analytic Modelling of Photovoltaic Cells

- Modelling of monofacial PV cells without electrical parameters

→ This method uses some datasheet parameters, avoiding the complete computation and modelling of physics variables to determinate the I-V curve

→ The model considers the temperature and effective irradiance on the module, a lineal shadow factor, short current and open circuit voltage

→ The I-V curve is presented by the following equation

$$I(V) = \frac{I_x}{1 - \exp(\frac{-1}{b})}[1 - \exp(\frac{V}{bV_x} - \frac{1}{b})]$$

Analytic Modelling of Photovoltaic Cells

- Datasheet model

→ The I-V curve is represented by the following equations

$$I(V) = \frac{I_x}{1 - \exp(\frac{-1}{b})}[1 - \exp(\frac{V}{bV_x} - \frac{1}{b})]$$

→ where,

$$V_x = \frac{G}{G_n}k_v(T - T_n) + V_{\text{máx}} - (V_{\text{máx}} - V_{\text{mín}})\exp(\frac{G}{G_n}\ln(\frac{V_{\text{máx}} - V_{ocn}}{V_{\text{máx}} - V_{\text{mín}}}))$$

$$I_x = \frac{G}{G_n}I_{scn} + k_i(T - T_n)$$

$$V_{\text{máx}} \approx 1{,}03V_{ocn} \qquad V_{\text{mín}} \approx 0{,}85V_{ocn} \qquad b \approx \frac{\frac{V_m}{V_{oc}} - 1}{\ln(1 - \frac{I_m}{I_{sc}})}$$

Analytic Modelling of Bifacial Solar Cells

- Double Circuit Model

→ Equivalent circuit and characteristic equation of a bifacial cell using a double circuit model

$$I_f = I_{phf} - I_{0f}[exp(\frac{q(V + I_f R_{sf})}{m_f kT}) - 1] - \frac{V + I_f R_{sf}}{R_{pf}}$$

$$I_p = I_{php} - I_{0p}[exp(\frac{q(V + I_p R_{sp})}{m_p kT}) - 1] - \frac{V + I_p R_{pf}}{R_{pf}}$$

$$I = I_f + I_p$$

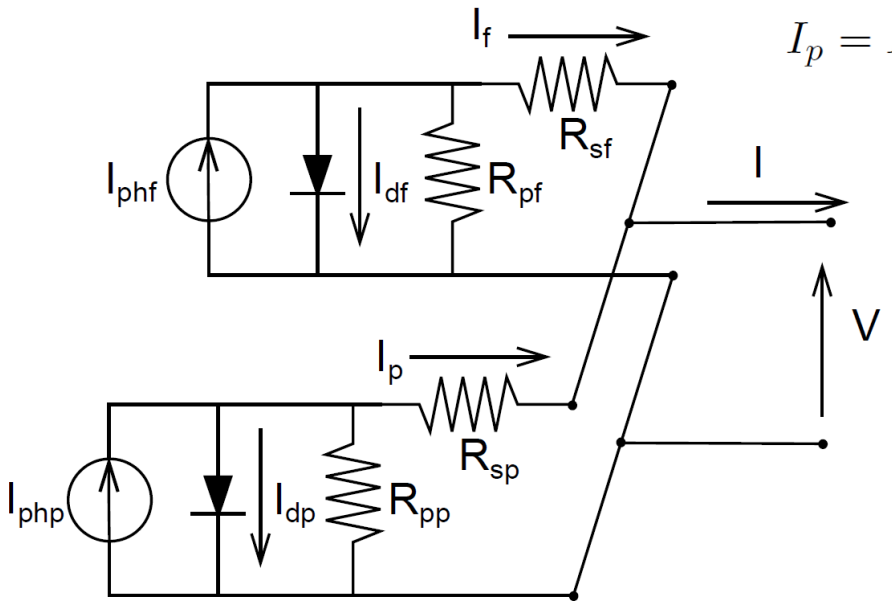

→ The model considers two series-connected monofacial cells, with different efficiencies, parameters and variables

Analytic Modelling of Bifacial Solar Cells

- Double Irradiance Model

→ Equivalent circuit and characteristic equation of a bifacial cell using a double irradiance model

$$I = I_{phf} + I_{php} - I_0[exp(\frac{q(V + IR_s)}{mkT}) - 1] - \frac{V + IR_s}{R_p}$$

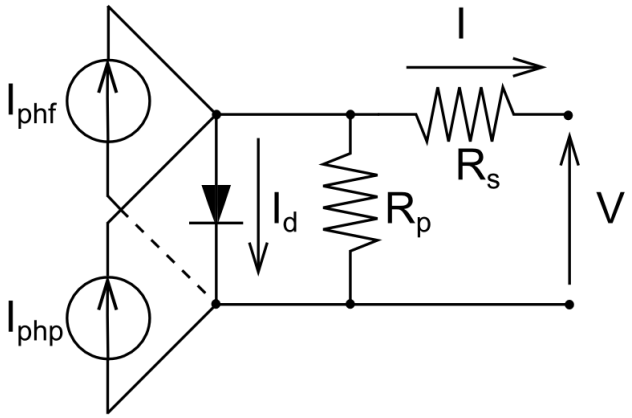

→ The model considers two independent current sources, but with concentrated losses parameters

Outline

1. Introduction
2. Analytic Modelling of Photovoltaic Cells
3. Parameter Estimation Methods for Monofacial and Bifacial Solar Cells
4. Preliminary Results
5. Summary

Parameter Estimation Methods for Monofacial and Bifacial Solar Cells

→ Accurate model of solar modules are needed to simulate and analyze PV power systems in presence of irradiance and temperature changes

→ The above models need some unknown parameters as series/parallel resistances, diode ideal factor, saturation diode current and the photocurrent

→ Parameters estimation methods can be classified by using non-linear equations resolution and experimental I-V curve fitting

→ Non-linear equations methods can be classified in coupled multivariable and decouple equations

Parameter Estimation Methods for Monofacial and Bifacial Solar Cells

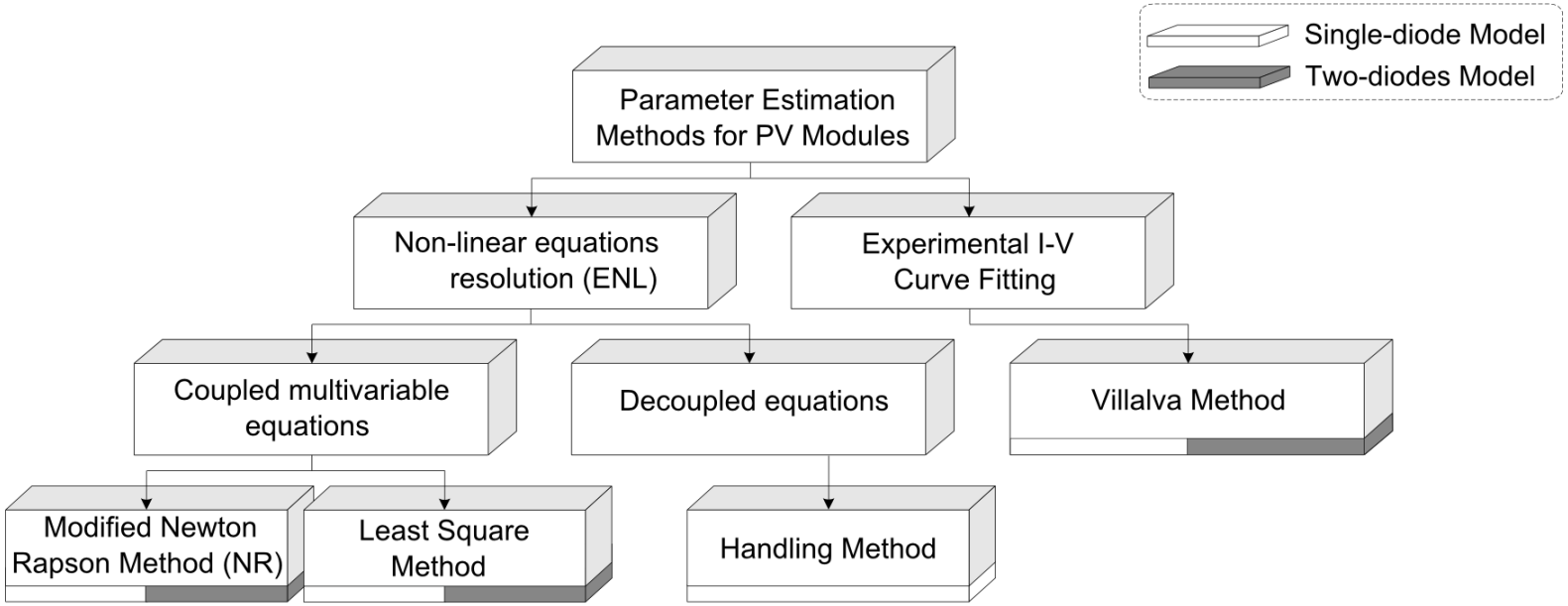

Experimental I-V curve fitting

→ This method uses the datasheet information to estimate the models by using a curve fitting computed with border points

→ The idea is to match the experimental maximum power $P_m = V_m I_m$ with the approximated maximum power in function of R_s and R_p

→ For a single-diode model, this method approximates the following curve

$$I = I_{ph} - I_0[\exp(\frac{V + IR_s}{mV_t}) - 1] - \frac{V + IR_s}{R_p}$$

→ then, assuming that $P_{\text{máx}m} = P_{\text{máx}e} = V_m I_m$

$$R_p = \frac{V_m(V_m + R_s I_m)}{\{V_m I_m - V_m I_0 \cdot \exp[\frac{q}{kT}\frac{V_m + R_s I_m}{N_s m}] + V_m I_0 - P_{\text{máx}e}\}}$$

SERC CHILE
SOLAR ENERGY RESEARCH CENTER

Experimental I-V curve fitting

→ initialization

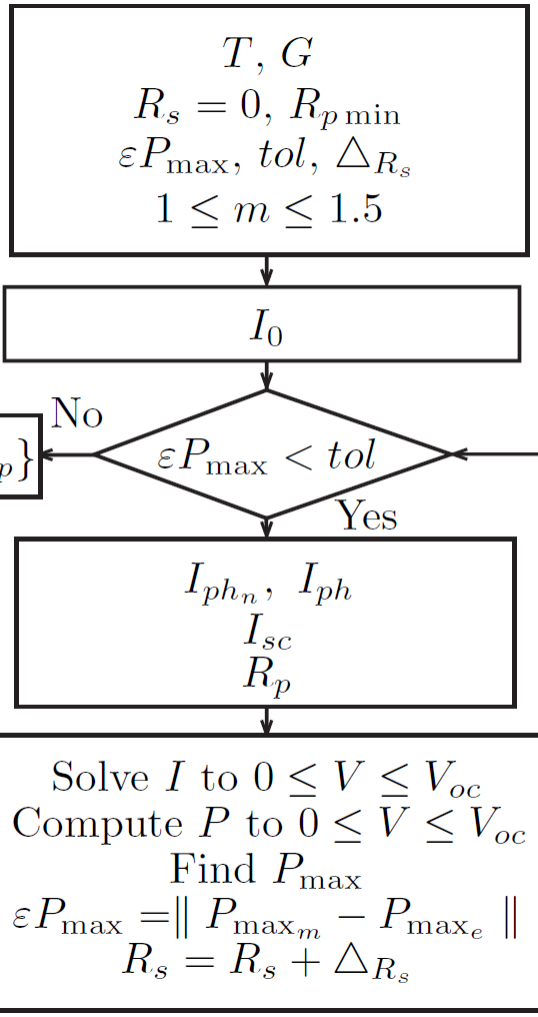

→ diode current

→ parameters computation

→ search process

- Villalva method applied to single-diode model

$$\rightarrow R_{p_{min}} = \frac{V_{mn}}{I_{scn} - I_{mn}} - \frac{V_{ocn} - V_{mn}}{I_{mn}}$$

$$\rightarrow I_0 = \frac{I_{scn} + K_i \triangle T}{\exp((V_{ocn} + K_v \triangle T)/mV_t) - 1}$$

$$\rightarrow I_{ph_n} = I_{scn} \frac{R_p + R_s}{R_p}$$

$$\rightarrow I_{ph} = (I_{ph_n} + K_i \triangle T) \frac{G}{G_n}$$

$$\rightarrow I_{sc} = (I_{scn} + K_i \triangle T)$$

$$\rightarrow I = I_{ph} - I_0[\exp(\frac{V + IR_s}{mV_t}) - 1] - \frac{V + IR_s}{R_p}$$

SERC CHILE
SOLAR ENERGY RESEARCH CENTER

Non-linear equations resolution

→ This method uses the datasheet information to built a non-linear multivariable equation system, where the respective solutions are the model parameters

→ To solve the equation system a numerical method is used

→ Common solvers are based on Newton Raphson and Least Square

- Coupled equations solved with Modified Newton Raphson

→ The method consists into compute the series

$$\vec{x}_{n+1} = \vec{x_n} - J^{-1}(\vec{x_n})\vec{F}(\vec{x_n})$$

where,

$$\vec{x_0} = (x_1, x_2, \cdots x_n) \qquad \vec{F} = (f_1, f_2, \cdots f_n) \qquad J = \begin{vmatrix} \frac{\partial f_1}{\partial x_1} & \frac{\partial f_1}{\partial x_2} & \cdots & \frac{\partial f_n}{\partial x_n} \\ \frac{\partial f_2}{\partial x_1} & \frac{\partial f_2}{\partial x_2} & \cdots & \frac{\partial f_n}{\partial x_n} \\ \vdots & \vdots & \cdots & \vdots \\ \frac{\partial f_n}{\partial x_1} & \frac{\partial f_n}{\partial x_2} & \cdots & \frac{\partial f_n}{\partial x_n} \end{vmatrix}$$

Non-linear equations resolution

- Modified Newton Raphson

→ Three border currents from the datasheet: I_{sc}, I_{ph}, I_m

→ Short circuit

$$I_{sc} = I_{ph} - I_0[\exp(\frac{I_{sc}R_s}{mV_t}) - 1] - \frac{I_{sc}R_s}{R_p}$$

→ Open circuit

$$I_{ph} = I_0[\exp(\frac{V_{oc}}{mV_t}) - 1] + \frac{V_{oc}}{R_p}$$

→ Maximum power

$$I_m = I_{ph} - I_0[\exp(\frac{V_m + I_m R_s}{mV_t}) - 1] - \frac{V_m + I_m R_s}{R_p}$$

→ Derivative equations

$$\frac{\partial I}{\partial V}\Big|_{I=I_{sc}} = -\frac{1}{R_p} \qquad \frac{\partial P}{\partial V}\Big|_{V=V_m} = 0$$

→ Initial conditions

$$I_{ph_0} \approx I_{sc} \qquad R_{s0} = -(\frac{dV}{dI})\Big|_{V=V_{oc}}$$

$$I_{00} = I_0$$

$$1 \leq m_0 \leq 1{,}5 \qquad R_{p0} = -(\frac{dV}{dI})\Big|_{I=I_{sc}}$$

Non-linear equations resolution

- Decoupled equations: Handling method

→ The idea is to find five decoupled equations in function of some border points

→ The method begins with a fixed ideal factor *m* (between [1,1.5])

→ Obtain R_s from $$\frac{\partial I}{\partial V} = -\frac{I_m}{V_m}$$

→ Obtain R_p from $$R_p = \frac{(V_m - I_m R_s)(V_m - R_s(I_{sc} - I_m) - mV_t)}{(V_m - I_m R_s)(I_{sc} - I_m) - mV_t I_m}$$

→ Obtain I_0 from $$I_0 = \frac{(R_s + R_p)I_{sc} - V_{oc}}{R_p \cdot \exp(\frac{V_{oc}}{mV_t})}$$

→ Obtain I_{ph} from $$I_{ph} = I_{sc}\frac{R_p + R_s}{R_p}$$

SERC CHILE
SOLAR ENERGY RESEARCH CENTER

Outline

1. Introduction
2. Analytic Modelling of Photovoltaic Cells
3. Parameter Estimation Methods for Monofacial and Bifacial Solar Cells
4. Preliminary Results
5. Summary

Preliminary Results

→ Evaluation of four different parameter estimation methods for single-diode models of monofacial and bifacial cell arrays respect to experimental measurements

→ The evaluated methods are
- Villalva
- Modified Newton Raphson
- Datasheet Based
- Handling

→ The used solar cell are Czochralski Silicon based
- 1 monofacial single-cell, Cz-Si p-type
- 60 series monofacial cells, Cz-Si p-type
- 1 bifacial single-cell, Cz-Si n-type
- 4 series bifacial cells, Cz-Si n-type

SERC CHILE
SOLAR ENERGY RESEARCH CENTER

Preliminary Results

→ I-V curve of a monofacial single-cell, Cz-Si p-type

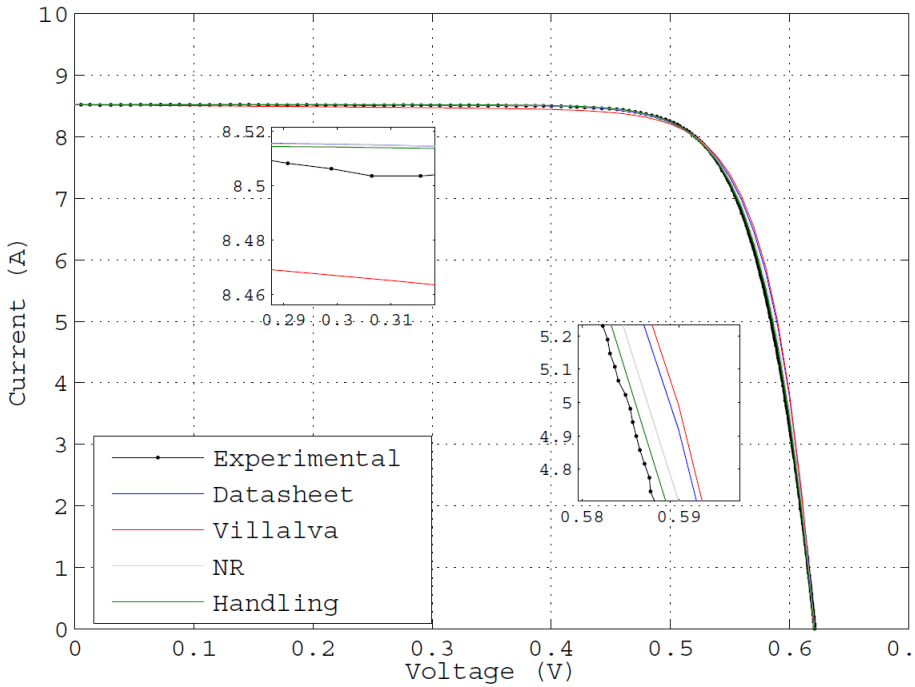

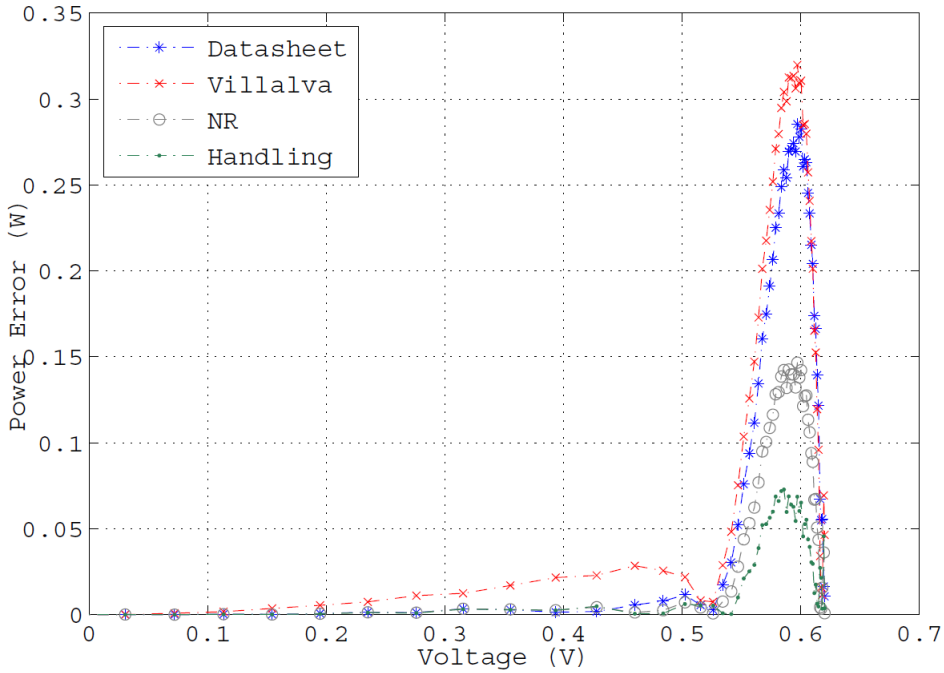

SERC CHILE
SOLAR ENERGY RESEARCH CENTER

Preliminary Results

→ I-V curve of a monofacial 60 cells, Cz-Si p-type

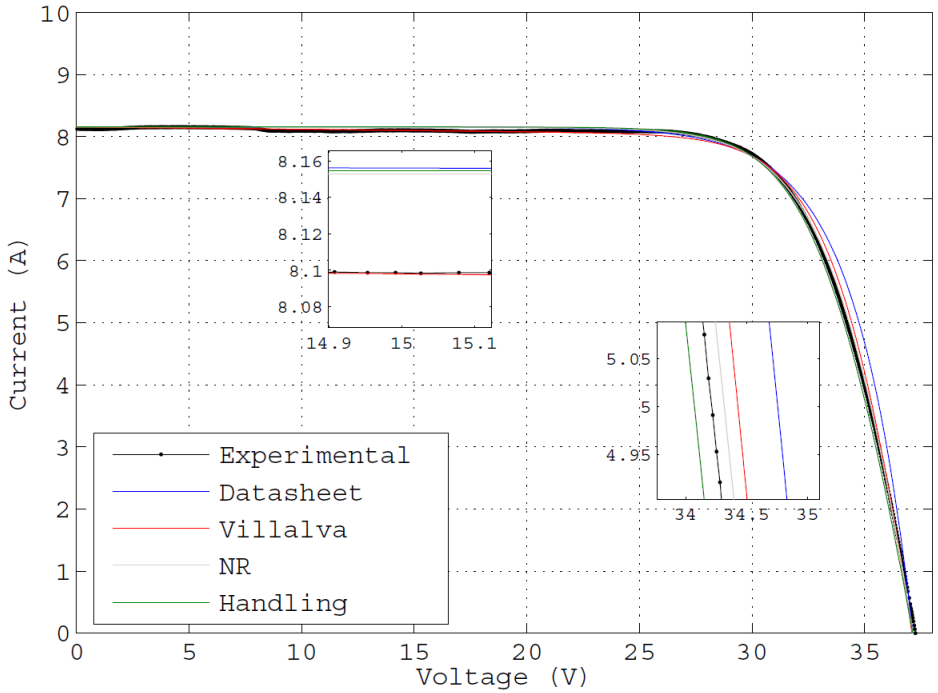

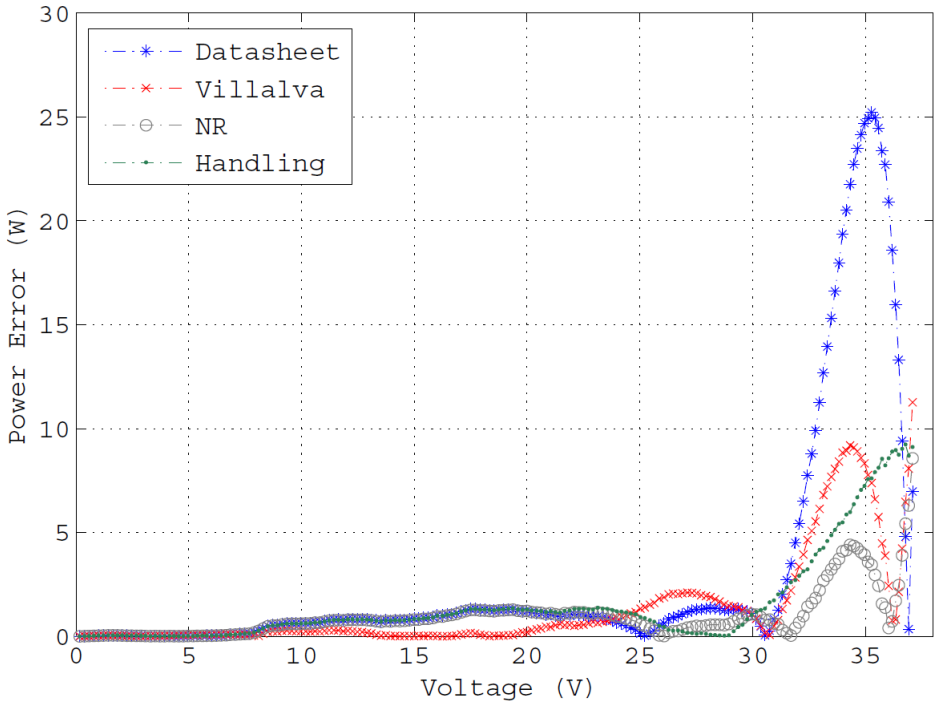

Preliminary Results

→ I-V curve of a bifacial single-cell, Cz-Si p-type

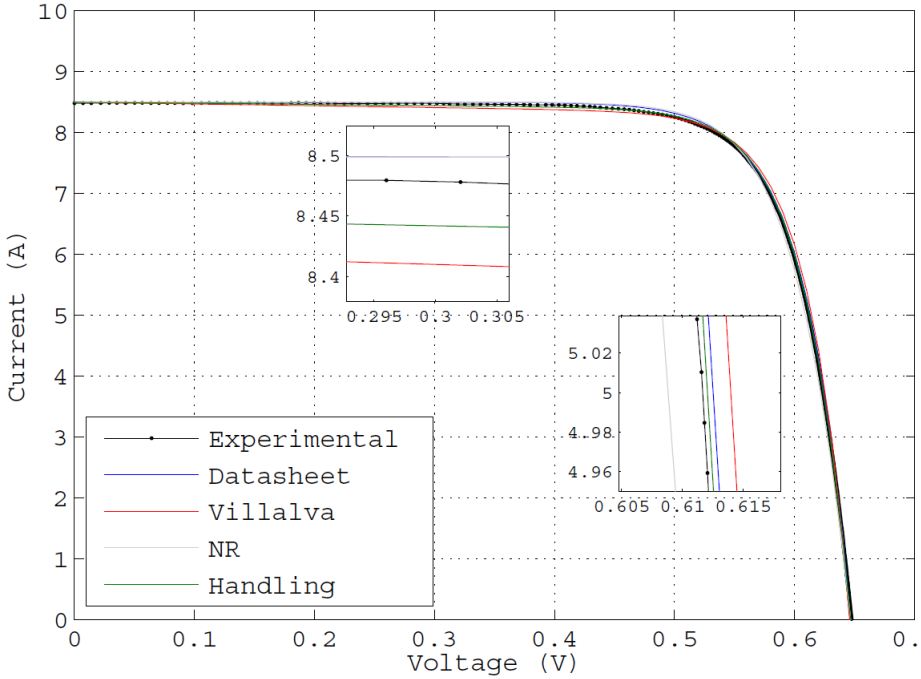

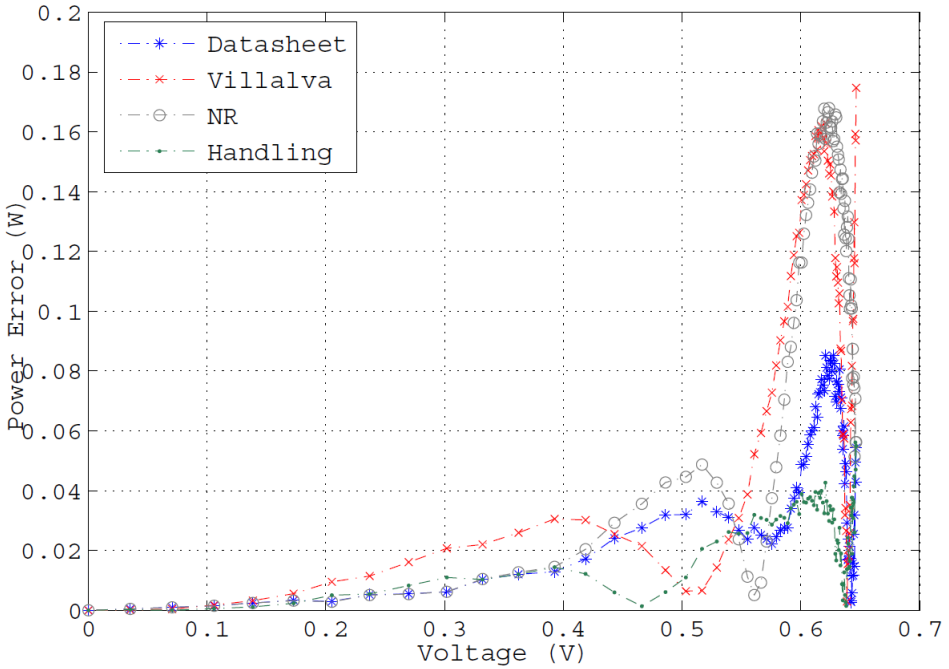

SERC CHILE
SOLAR ENERGY RESEARCH CENTER

Preliminary Results

→ I-V curve of a bifacial 4 cells, Cz-Si p-type

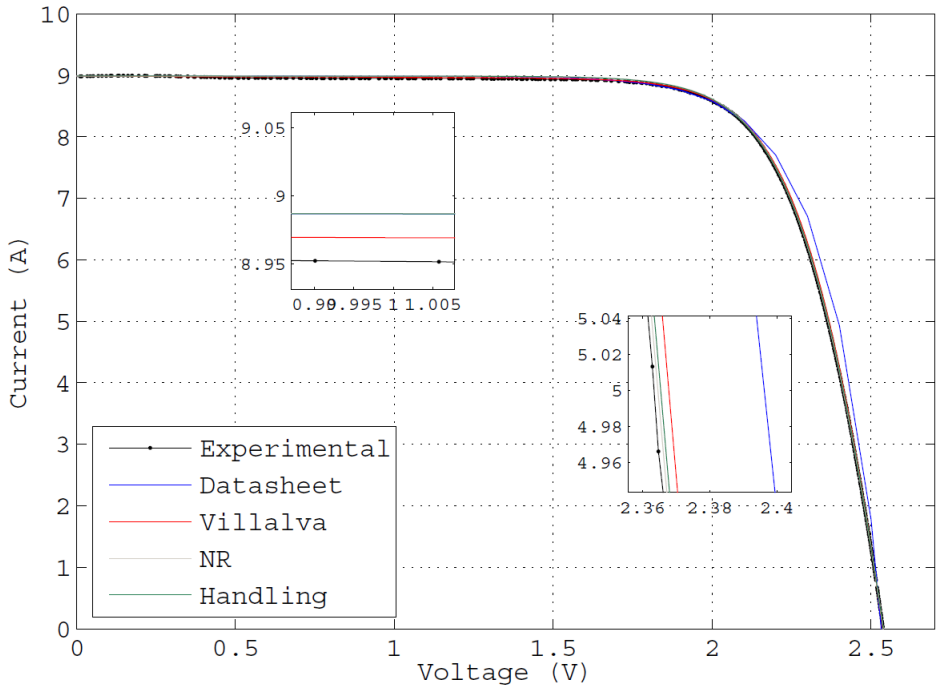

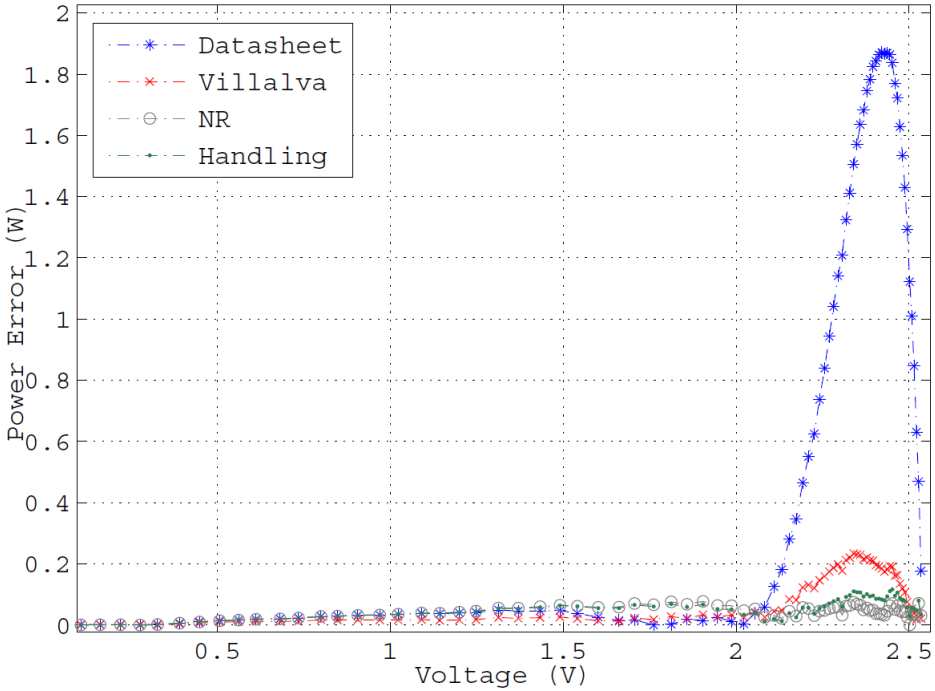

SERC CHILE
SOLAR ENERGY RESEARCH CENTER

Outline

1. Introduction
2. Analytic Modelling of Photovoltaic Cells
3. Parameter Estimation Methods for Monofacial and Bifacial Solar Cells
4. Preliminary Results
5. Summary

Summary

→ Modelling of monofacial and bifacial modules can help to understand the non-linear nature of PV plants and to design the PV power converters

→ A comprehensive review of models for monofacial modules have been analyzed and presented

→ Bifacial modules can be represented using conventional models of monofacial modules

→ Some parameters estimation methods have been presented to extract the fundamental parameters of non-linear PV modules representation

→ Preliminary results show that Handling and Modified Newton Raphson estimation methods have better performance than Villalva and Datasheet based methods

→ The future work is to compare all methods in the maximum power point and with different irradiance and temperatures

Thanks for your attention

SERC CHILE
SOLAR ENERGY RESEARCH CENTER

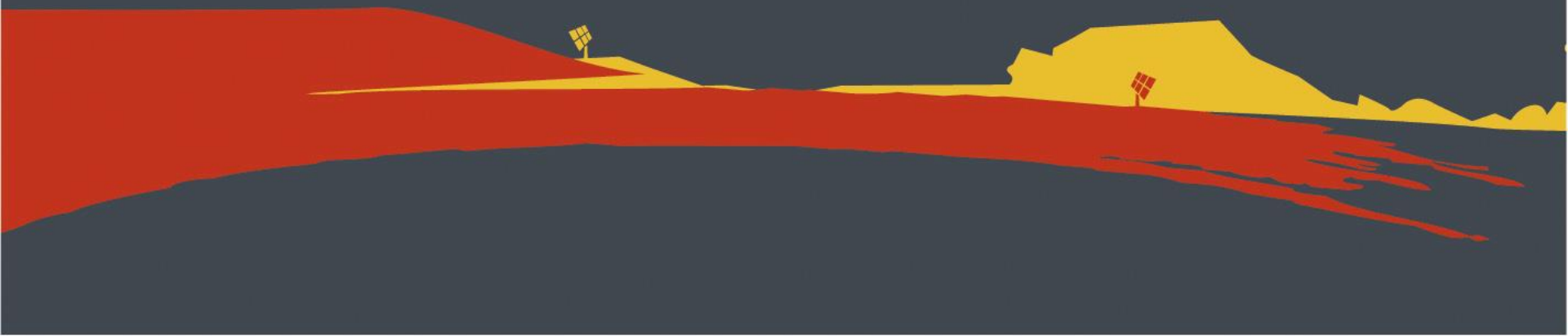

UNIVERSIDAD TECNICA
FEDERICO SANTA MARIA

SERC CHILE
SOLAR ENERGY RESEARCH CENTER

Modelling Monofacial and Bifacial Solar Modules

Christian Rojas
christian.rojas@usm.cl

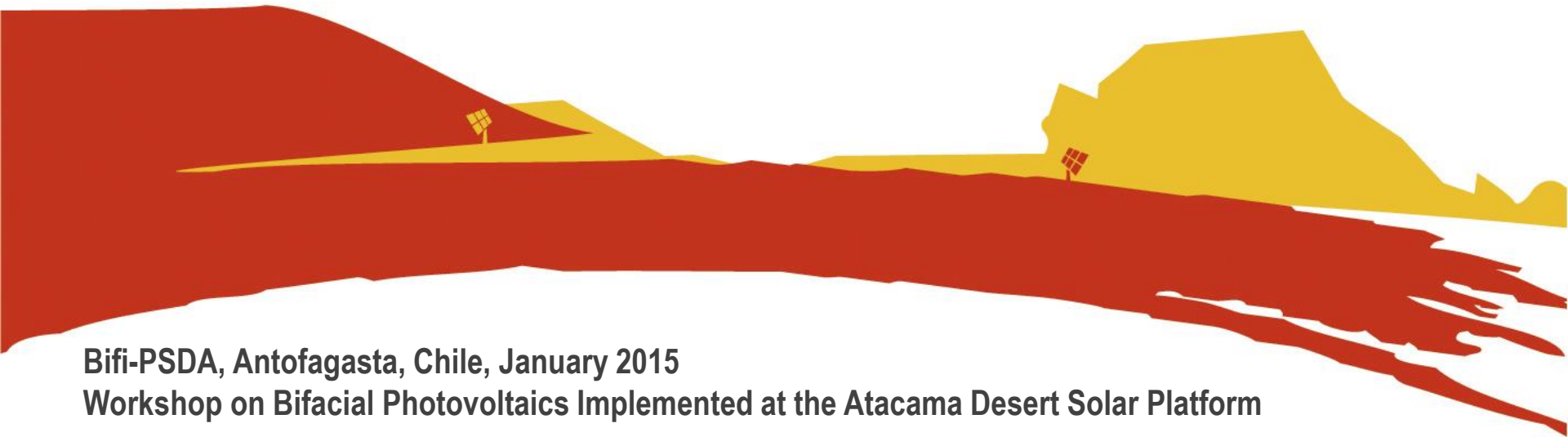

Bifi-PSDA, Antofagasta, Chile, January 2015
Workshop on Bifacial Photovoltaics Implemented at the Atacama Desert Solar Platform

Preliminary Results

→ Estimated parameters comparison

Table 2: Estimated parameters for 60 monofacial cells

Method	m	R_s (mΩ)	R_p (Ω)	I_0 (nA)	I_{ph} (A)
Experimental	-	496	870	-	8.16
Villalva	1.20	174	254	15.6	8.16
Newton Raphson	1.30	182	386	73.0	8.18
Handling	1.13	281	622	4.5	8.16

Table 3: Estimated parameters for a bifacial single-cell

Method	m	R_s (mΩ)	R_p (Ω)	I_0 (nA)	I_{ph} (A)
Experimental	-	2.09	38.33	-	8.50
Villalva	1.32	0.10	3.36	44.4	8.50
Newton Raphson	1.30	1.63	457.75	33.1	8.50
Handling	1.32	0.74	5.22	43.8	8.50

SERC CHILE
SOLAR ENERGY RESEARCH CENTER

Titulo Presentación

Subtitulo Presentación

Texto diapositiva

→ **CLASES INDIVIDUALES**

La instrucción privada permite, a cada estudiante, aprender a su propio ritmo y favorece su participación y conversación en clase. Los planes de estudios y horarios de los cursos son diseñados de acuerdo a sus necesidades.

→ **BLENDED E-LEARNING**

Programas de aprendizaje a distancia se mezclan con clases presenciales para asegurar una buena calidad y atractiva enseñanza. Ofrecemos una variedad de programas Blended con videoconferencias en vivo y programas no simultáneo.

SERC CHILE
SOLAR ENERGY RESEARCH CENTER